

INSTALLATION GUIDE | CROWN

Installation Steps

Pic Point Layout

Standard | Indirect Light | Direct Downlight/Sportlight

Variant 1:- Quba

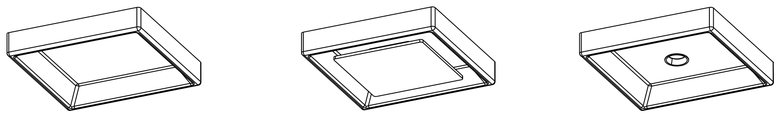

Variant 2:- Gesia

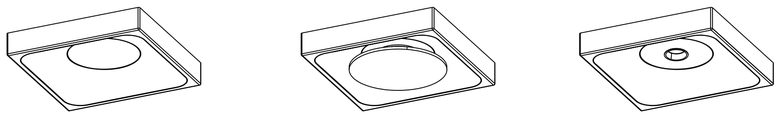

Variant 3:- Glod

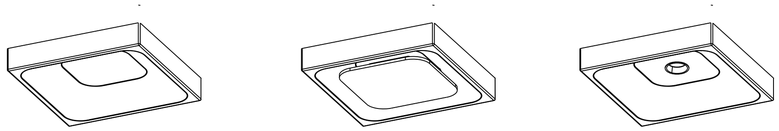

Variant 1:- Celiq

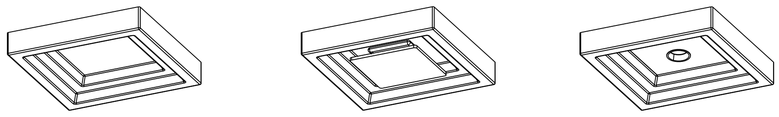

Standard Size

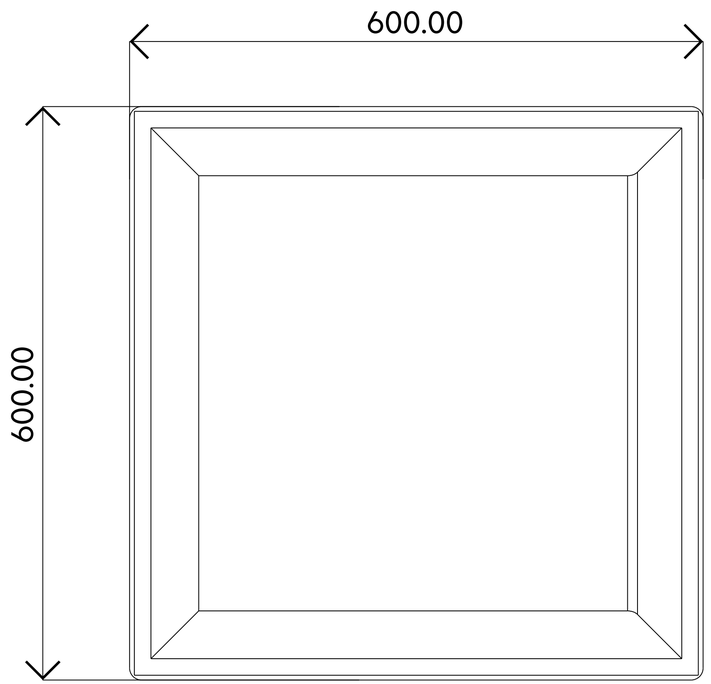



Parts Included

Standard

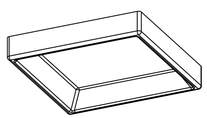

Indirect Light

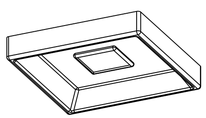

CROWN MODULE – AS SPECIFIED

Direct
Downlight/Sportlight

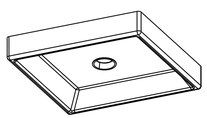

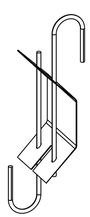

Adjustable Spring Hanger

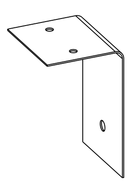

Angle Bracket



Torsion Spring.

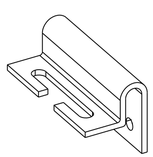

Torsion Spring Bracket

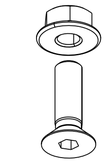

M6 Countersunk Bolt
and Flange Nut

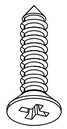

M4 x 38mm
Self-Tapping Screw



M4 x 13mm
Self-Tapping Screw



PVC Anchor

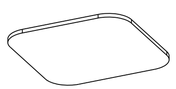

Indirect Light Cover

Note : Cover size and shape depend on the selected module.

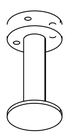

Indirect Light Suspension

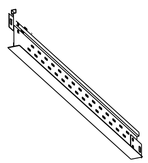

T-Grid-600

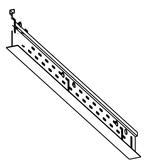

T-Grid-2400

Step A

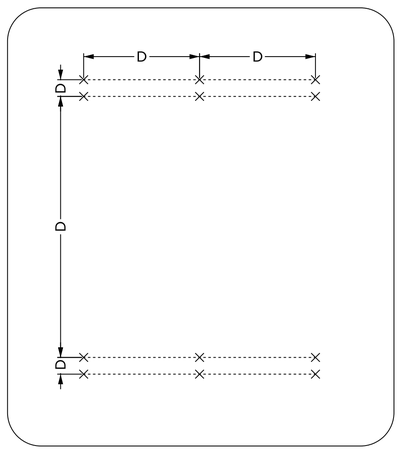

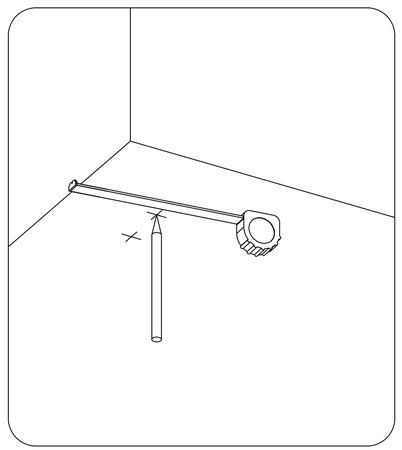

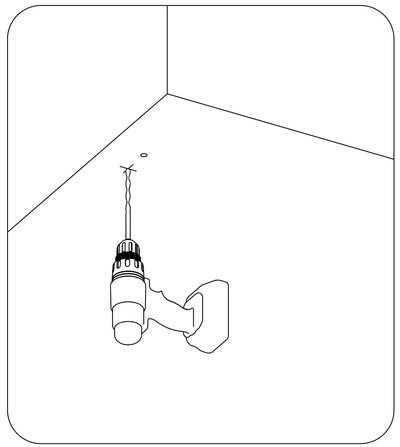

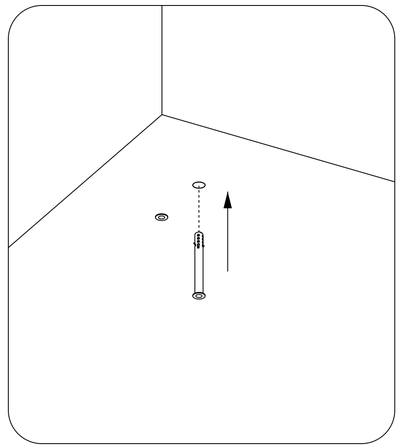

Step B

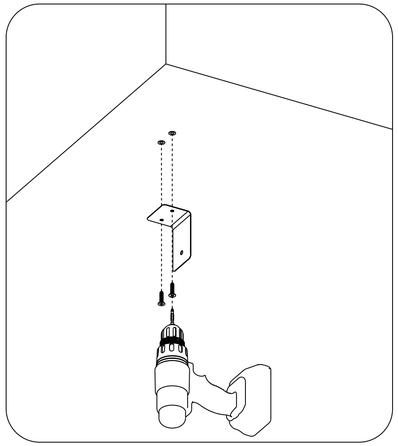

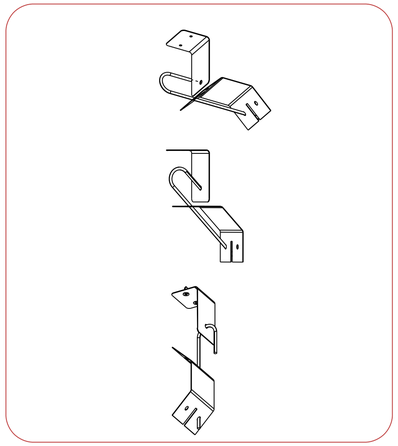

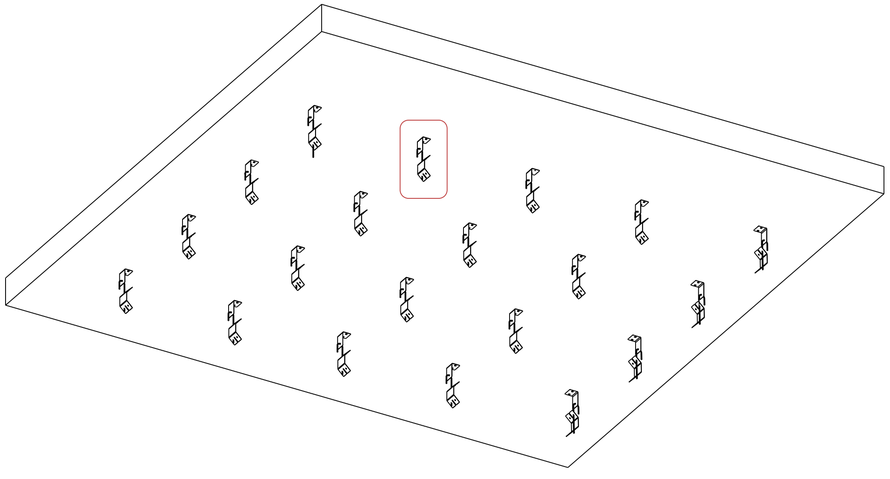

Step C

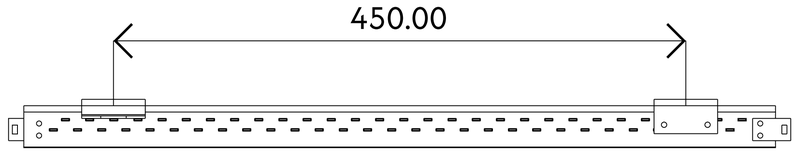

T-Grid-600

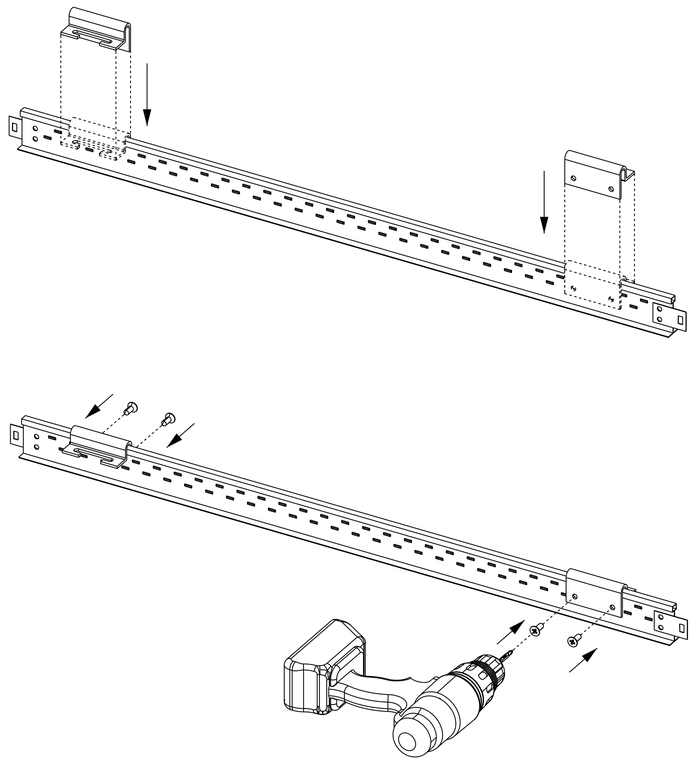

Step D

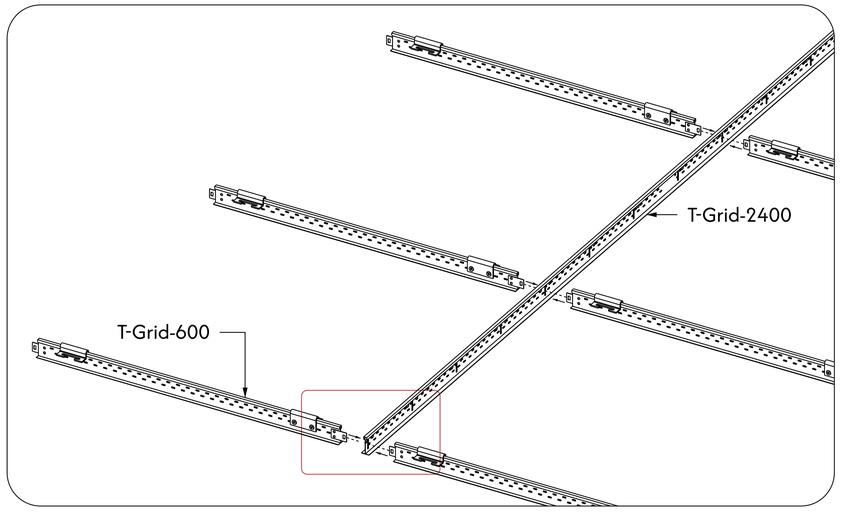

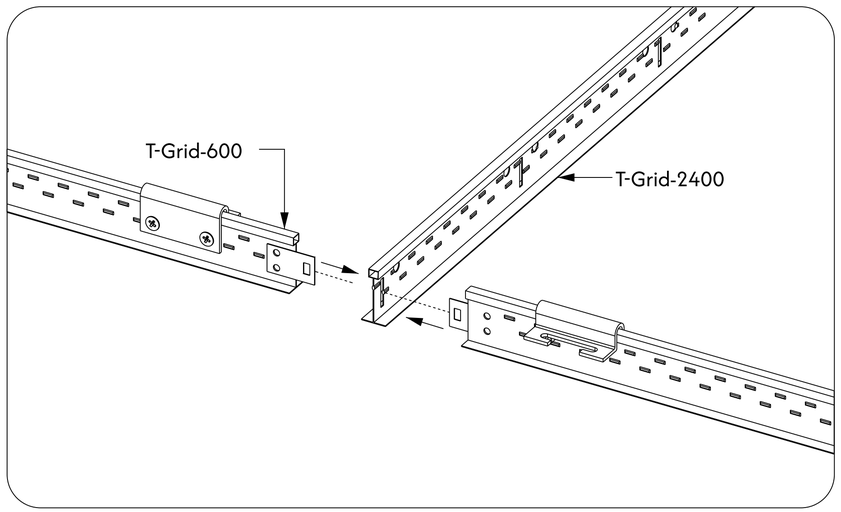

Step E

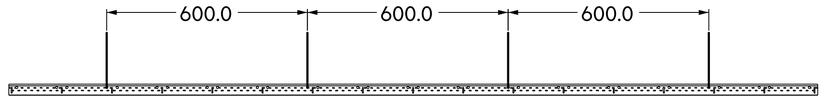

T-Grid-2400

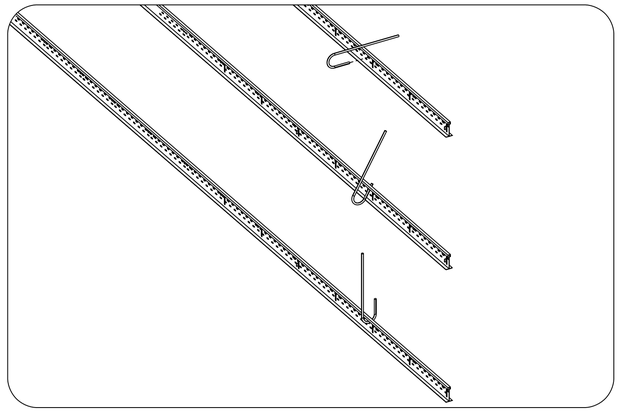

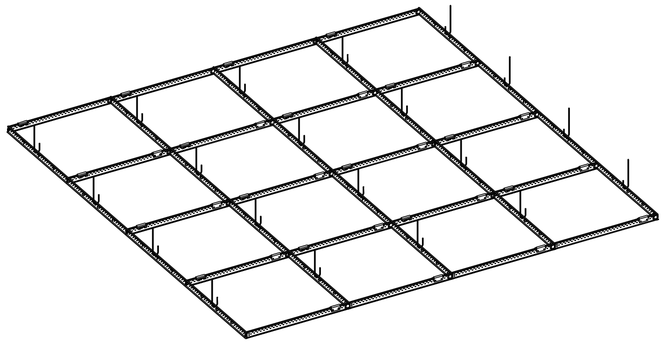

Step F

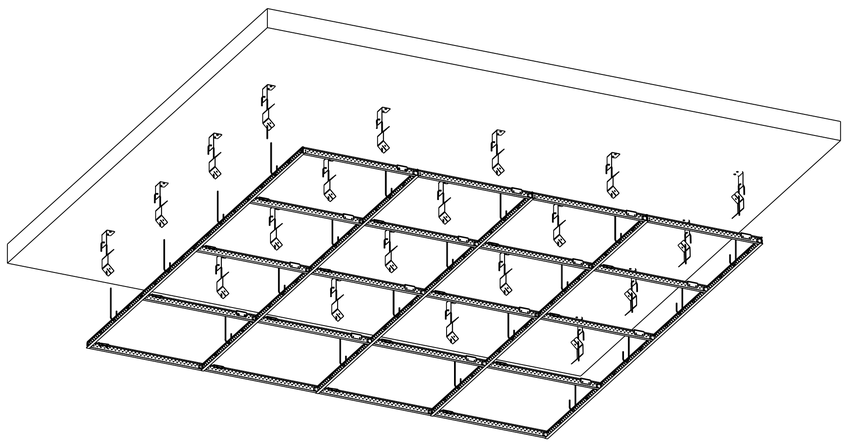

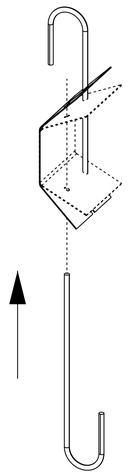

Step G

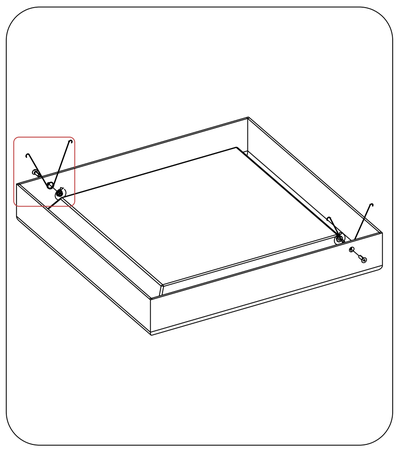

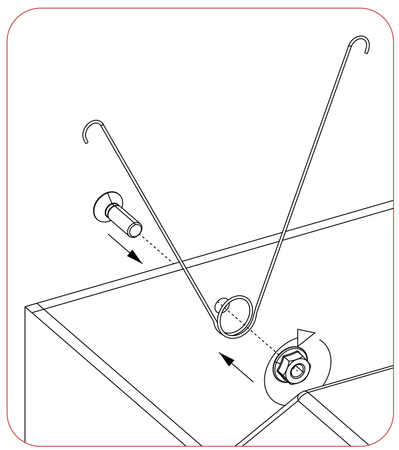

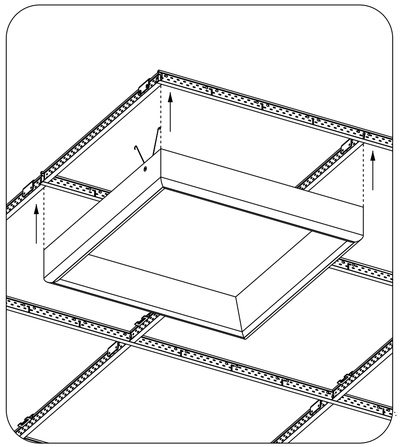

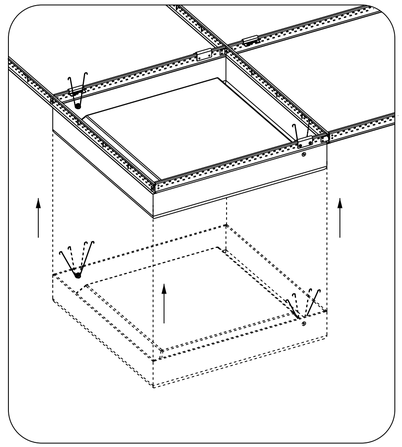

Step H

Only For Indirect Light

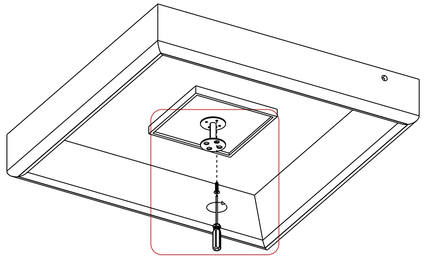

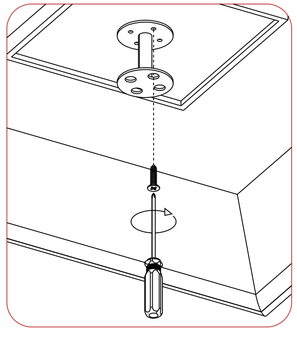

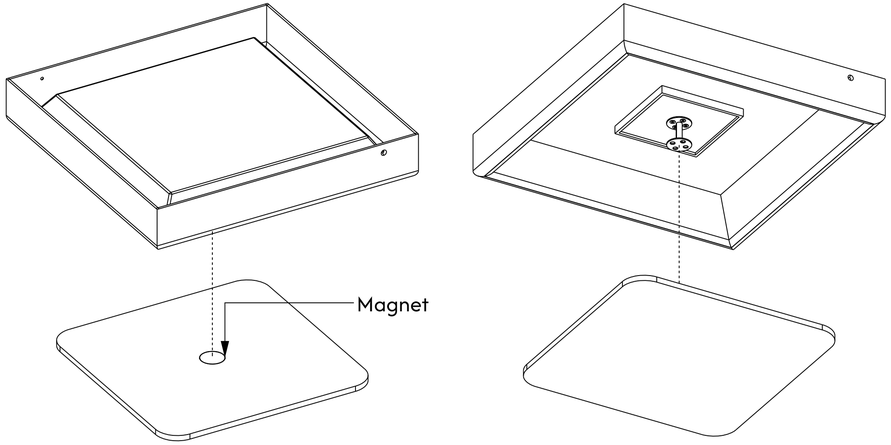

sales@sensesakustik.com

www.sensesakustik.com

©2025 Senses Akustik. All rights reserved. Installation may change without notice.
Trademarks are the property of Senses Akustik or their respective owners.

Published in: November 2026